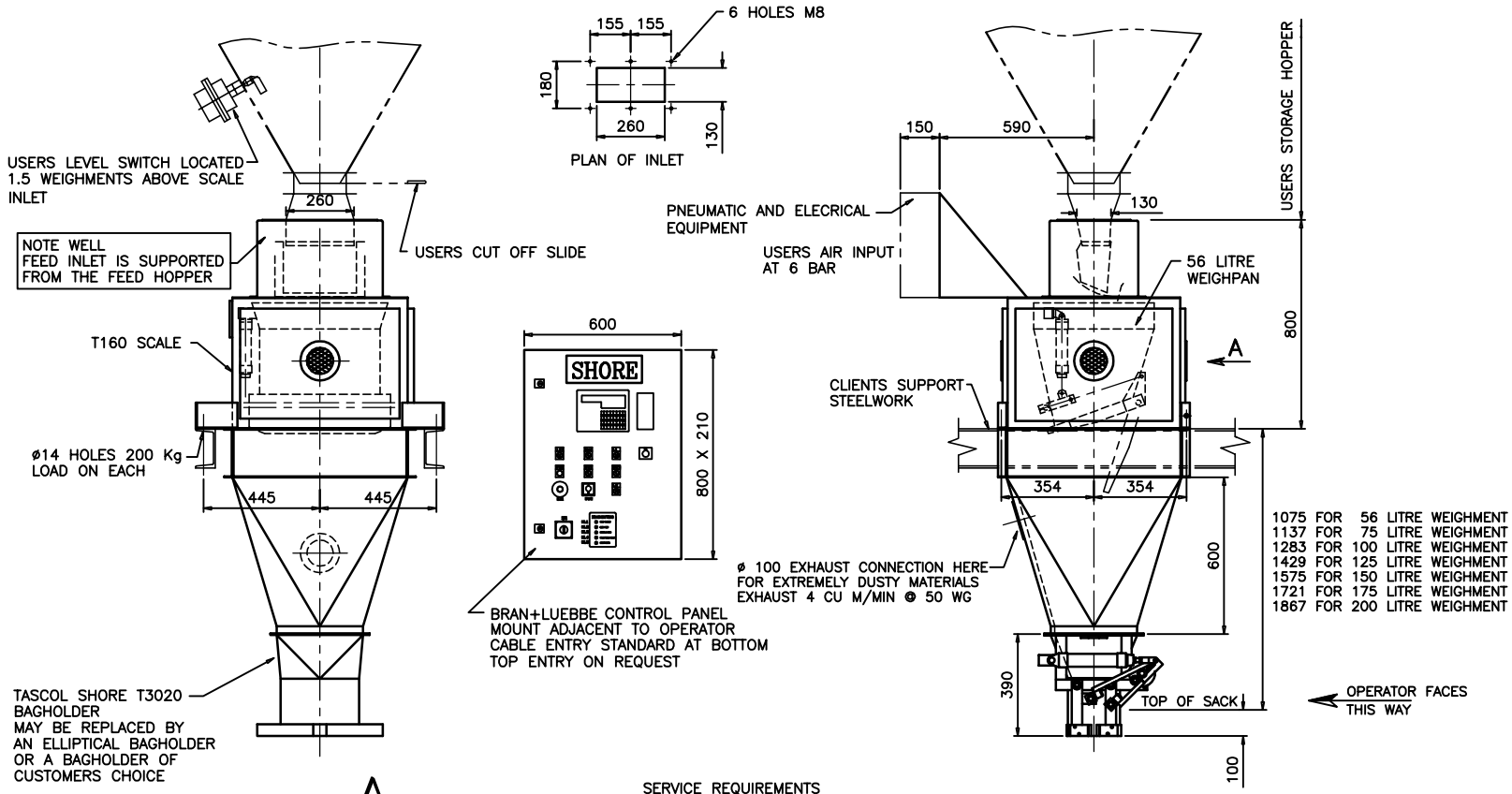

SERVICE REQUIREMENTS

ELECTRIC– 240 VAC 50 HZ SINGLE PHASE
PNEUMATIC– 150 LITRES FREE AIR PER MIN COMPRESSED
TO 6 BAR 1/4" BSP CONNECTION

TASCOL SHORE ENG LTD COPYRIGHT ©2002 USERS INSTALLATION RESPONSIBILITIES

MACHINES TO BE PLACED ON NON MOVING SUPPORTS WITH ALLOWABLE VIBRATION. MAX AMPLITUDE 0.25 mm, MIN FREQUENCY 0.5 Hz
ALLOWABLE INSIDE TEMPERATURE +0 DEG C TO + 40 DEG C. ALLOWABLE OUTSIDE TEMPERATURE –10 DEG C TO + 40 DEG C.
ALLOWABLE STORAGE TEMPERATURE –20 DEG C TO + 40 DEG C. HUMIDITY NOT TO EXCEED 85% RH NON-CONDENSING.
MACHINERY AND CONTROLS INSIDE NOT TO BE EXPOSED TO WASH, RAIN, SNOW OR AIR MOVEMENT, ALSO VACUUM & PRESSURE.
MICROPROCESSOR ROOM, ALLOWABLE TEMPERATURE + 10 DEG C TO +30 DEG C. HUMIDITY 45% TO 55% NON CONDENSING, DUST
FREE WITH CLEAN AIR VENTS AND ANTI–STATIC SURROUNDINGS. MICROPROCESSOR ROOM TO HAVE POSITIVE PRESSURE.
ELECTRICITY SUPPLY SHOULD BE NON–VARYING WITHOUT PEAKS, SPIKES, OR TRANSIENTS, AND ALL BUYER'S RELAYS AND CONTACTORS OR STARTERS
CLOSE TO THE TASCOL CONTROLS AND THE MICROPROCESSOR SHOULD BE FITTED WITH SUPPRESSORS TO AVOID TRANSMISSION OF ELECTRICAL NOISE.
SWITCHES, THE EARTH MUST BE CHECKED AND APPROVED BY THE ELECTRICAL SUPPLY AUTHORITY BEFORE COMMENCING.
FACTORY ENVIRONMENT MUST CONFORM TO 89/336/EEC BEING THE LEGAL REQUIREMENT WITHIN EUROPE AND EN 50081–2 ELECTROMAGNETIC
COMPATIBILITY GENERIC EMMUNITY STANDARDS.
RATE OF CHANGE OF AMBIENT TEMPERATURES SHOULD NOT EXCEED 10 DEGREES C PER HOUR
MACHINES, CONTROLS AND MICROPROCESSORS SHOULD NOT BE EXPOSED TO RADIO TRANSMISSIONS ABOVE 10 V/M.
CLIENTS AIR SUPPLY FOR MACHINERY SHOULD BE CLEAN, DRY, MIST LUBRICATED WITH A FILTER (MAX ELEMENT RATING 30 MICRONS).
FOR AERATION AND CONVEYING, CLIENTS AIR SHOULD BE DRY, CLEAN, FILTERED AND NOT LUBRICATED.
CLIENTS WILL PREVENT ANY UPSTREAM OR DOWNSTREAM PROCESS VAPOURS WHICH WILL HAVE ANY DETRIMENTAL EFFECT ON THE EQUIPMENT
OR MATERIALS BEING WEIGHED FROM REACHING THE EQUIPMENT OR MATERIALS.

REV 0	TASCOL SHORE ENGINEERING Ltd COPYRIGHT © 2003	THIS DRAWING AND COPIES OF IT ARE THE PROPERTY OF TASCOL SHORE AND MUST NOT BE COPIED OR CIRCULATED TO THIRD PARTIES WITHOUT THE WRITTEN CONSENT OF TASCOL SHORE ENG LTD	
DATE 5/03	CUSTOMER STANDARD	TITLE GRAVITY FED BL 160 NETT WEIGHER	SCALE 1:15
NAME DWFORD	TASCOL SHORE ENGINEERING Ltd NOTTINGHAM ENGLAND	Drg. No. M3–0103–343	SHEET 01